SDS 050L / SDS 050M 50 W

Features

- Power On with LED Indicator
- Input and Output Isolation
- Soft Start Function, Low Inrush Current
- Input Polarity Reverse Protection
- 1 Year Warranty

CE

Specifications SDS 050L

INPUT	**Voltage**	9.5 ~ 36V DC (TYPICAL 24V)			
	Current	<7.3A@9.5V DC input full load condition			
OUTPUT	**Voltage**	**5V**	**12V**	**24V**	**48V**
	Min Load	0A	0A	0A	0A
	Max Load	9A	4.2A	2.1A	1.1A
	Output Tolerance ②	±2%	±1%	±1%	±1%
	Ripple Noise MAX. ③	70mV	120mV	150mV	240mV
	Efficiency (TYP)	75%	80%	82%	84%
	Output MAX.	45W	50W	50W	53W
PROTECTION	**Over Voltage**	5.8~7.0V	13.8~16.8V	27.6~33.6V	55.2~67.2V
		Shutdown and latch off, recover after re-start up.			
	Over Load & Short Circuit	When power supply over 105%~ 150% max load or short circuit acted, power supply will be shutdown and latch off, recover after re-start up.			
ELEC. CHAR.	**Rise time**	<30mS			
ENVIRONMENT	**Temperature** ④	Operating: -20 ~ +70℃ ; De-rating: 45 ~ 70℃: 2.5%/℃ ; Storage: -40 ~ +85℃			
	Humidity	Operating: 20% ~ 90% RH (non condensing); Storage: 10% ~ 95% RH (non condensing)			
SAFETY	**Withstand voltage**	I/P-O/P:2.0KVAC, I/P-FG:1.5KVAC, O/P-FG:0.5KVAC, 1minute			
	Isolation resistance	I/P-O/P, I/P-FG, O/P-FG ＞100MΩ/500VDC at 25℃/ 70% RH			
EMC	**EMI**	EN 55022 CLASS B、FCC CFR 47 PART 15 CLASS B、CNS 13438 CLASS B.			
	EMS	EN 55024：EN 61000-4-2,3,4,5,6,8；ENV 50204			
OTHERS	**Cooling**	Natural cooling			
	M.T.B.F.	417 K hours			
	Dimension	99 x 82 x 35 ㎜ (L*W*H)			
	Packing	N.W.:0.34Kg / 1pc; 46pcs / 1.22 CUFT / 1 CTN			
NOTE	① All measurements which not mentioned are based on 24VDC input, **output Max** at ambient 25℃ / 70%RH ② Output tolerance included set up voltage, line regulation and load regulation. ③ Ripple & noise are measured at 10～50℃ condition and 20MHz of bandwidth by using a 10″ ～15″ twisted pair-wire terminated with a 0.1uF & a 47uF parallel capacitor. ④ The operating temperature shall follow the de-rating curve in spec ⑤ The power supply is considered a component of end-equipment. The end-equipment must be re-confirmed whether comply with EMC directives.				

SDS 050L / SDS 050M 50 W

Specifications SDS 050M

INPUT	**Voltage**	19V ~ 72V DC (TYPICAL 48V)			
	Current	<3.6A@19 V DC input full load condition			
OUTPUT	**Voltage**	**5V**	**12V**	**24V**	**48V**
	Min Load	0A	0A	0A	0A
	Max Load	9A	4.2A	2.1A	1.1A
	Output Tolerance ②	±2%	±1%	±1%	±1%
	Ripple Noise MAX. ③	70mV	120mV	150mV	240mV
	Efficiency (TYP)	77%	82%	84%	86%
	Output MAX.	45W	50W	50W	53W
PROTECTION	**Over Voltage**	5.8~7.0V	13.8~16.8V	27.6~33.6V	55.2~67.2V
		Shutdown and latch off, recover after re-start up.			
	Over Load & Short Circuit	When power supply over 105%~ 150% max load or short circuit acted, power supply will be shutdown and latch off, recover after re-start up.			
ELEC. CHAR.	**Rise time**	<30mS			
ENVIRONMENT	**Temperature** ④	Operating: -20 ~ +70℃ ; De-rating: 45 ~ 70℃: 2.5%/℃ ; Storage: -40 ~ +85℃			
	Humidity	Operating: 20% ~ 90% RH (non condensing); Storage: 10% ~ 95% RH (non condensing)			
SAFETY	**Withstand voltage**	I/P-O/P:2.0KVAC, I/P-FG:1.5KVAC, O/P-FG:0.5KVAC, 1minute			
	Isolation resistance	I/P-O/P, I/P-FG, O/P-FG ＞100MΩ/500VDC at 25℃/ 70% RH			
EMC	**EMI**	EN 55022 CLASS B、FCC CFR 47 PART 15 CLASS B、CNS 13438 CLASS B.			
	EMS	EN 55024：EN 61000-4-2,3,4,5,6,8；ENV 50204			
OTHERS	**Cooling**	Natural cooling			
	M.T.B.F.	417 K hours			
	Dimension	99 x 82 x 35 ㎜ (L*W*H)			
	Packing	N.W.:0.34Kg / 1pc; 46pcs / 1.22 CUFT / 1 CTN			
NOTE	① All measurements which not mentioned are based on 48VDC input, **output Max** at ambient 25℃ / 70%RH ② Output tolerance included set up voltage, line regulation and load regulation. ③ Ripple & noise are measured at 10～50℃ condition and 20MHz of bandwidth by using a 10″ ～15″ twisted pair-wire terminated with a 0.1uF & a 47uF parallel capacitor. ④ The operating temperature shall follow the de-rating curve in spec ⑤ The power supply is considered a component of end-equipment. The end-equipment must be re-confirmed whether comply with EMC directives.				

Input Voltage Connection:

A TPYE : +48V Input

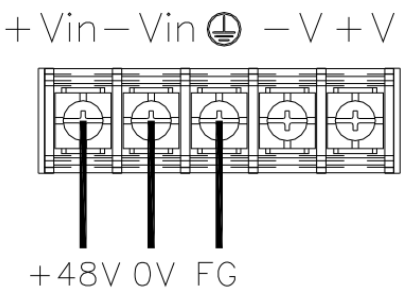

B TPYE : -48V Input

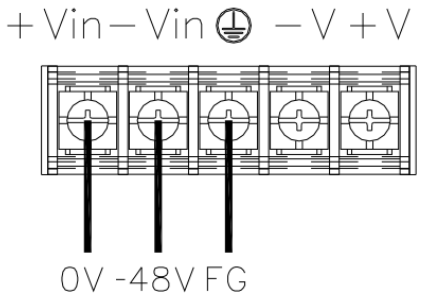

SDS-050L-xx Series

Block Diagram：DS2

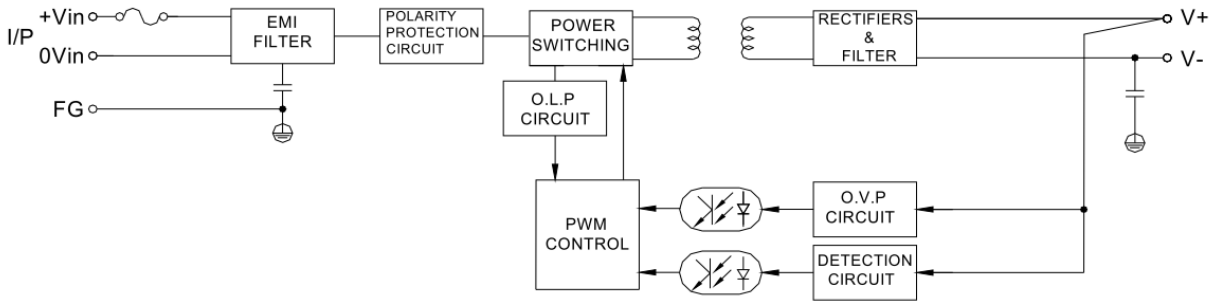

De-rating Curve：

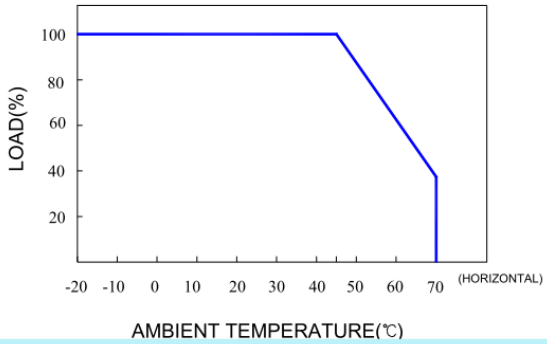

Output De-rating Vs Input Voltage：

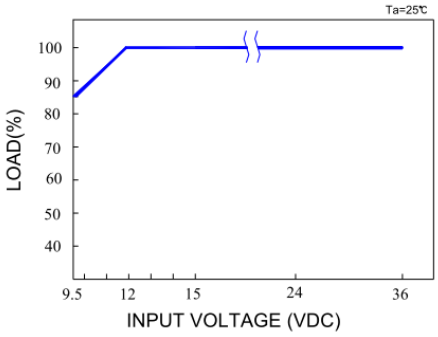

Dimension:

(Unit: mm)

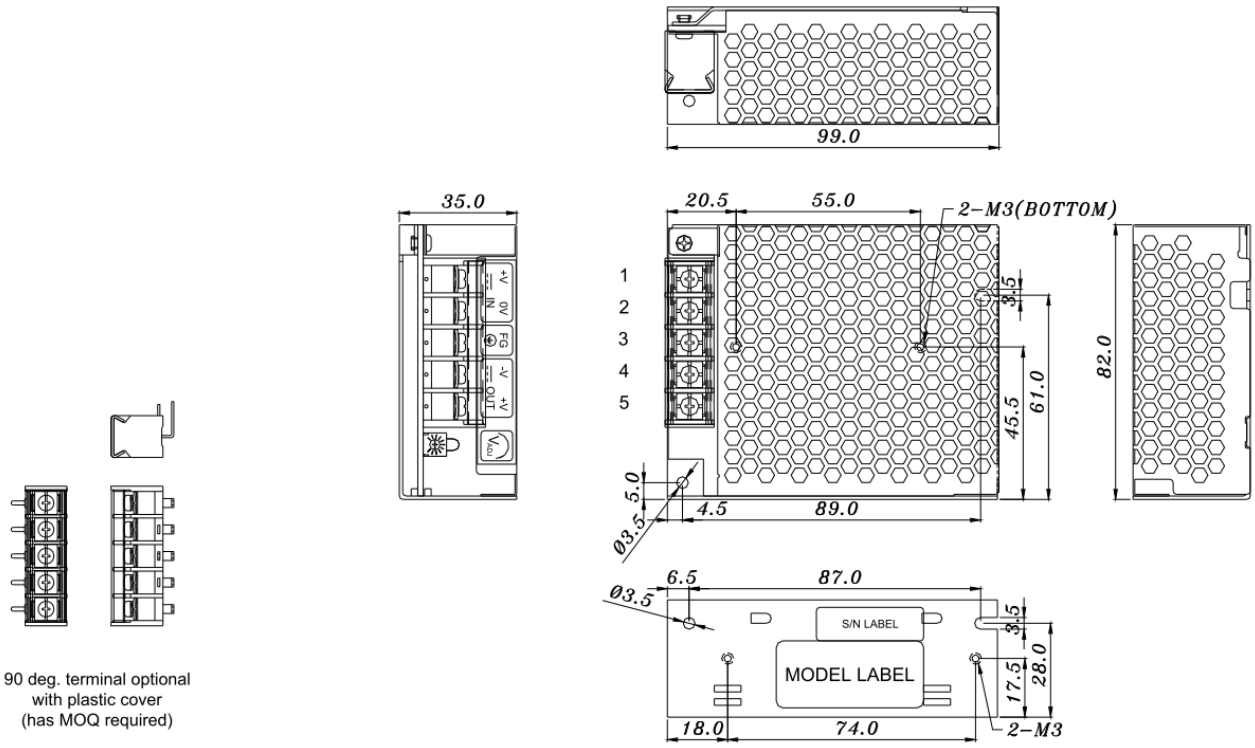

NOTES:

5P, PITCH 9.5mm WITH PC COVER							
MODEL No.	1	2	3	4	5	6	7
SDS-100L-xx	+Vin	0Vin	FG	-V	-V	+V	+V

SDS-050M-xx Series

Block Diagram：DS2

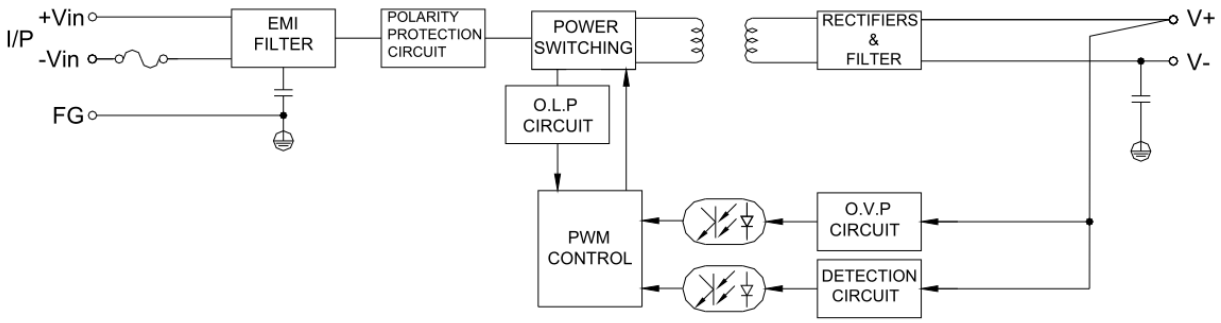

De-rating Curve：

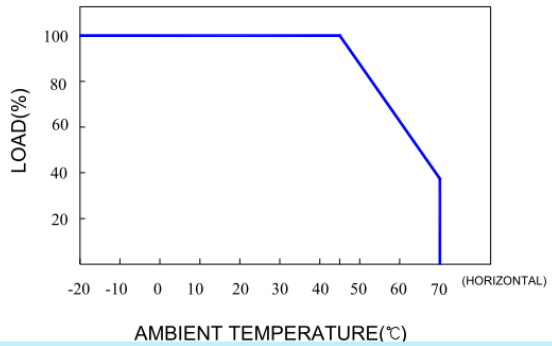

Output De-rating Vs Input Voltage：

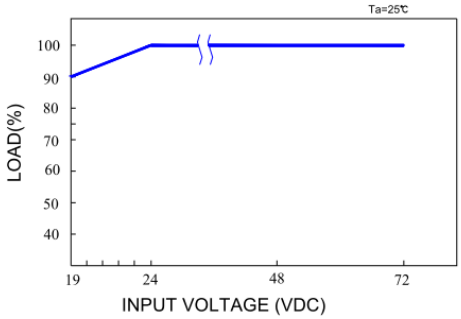

Dimension:

(Unit: mm)

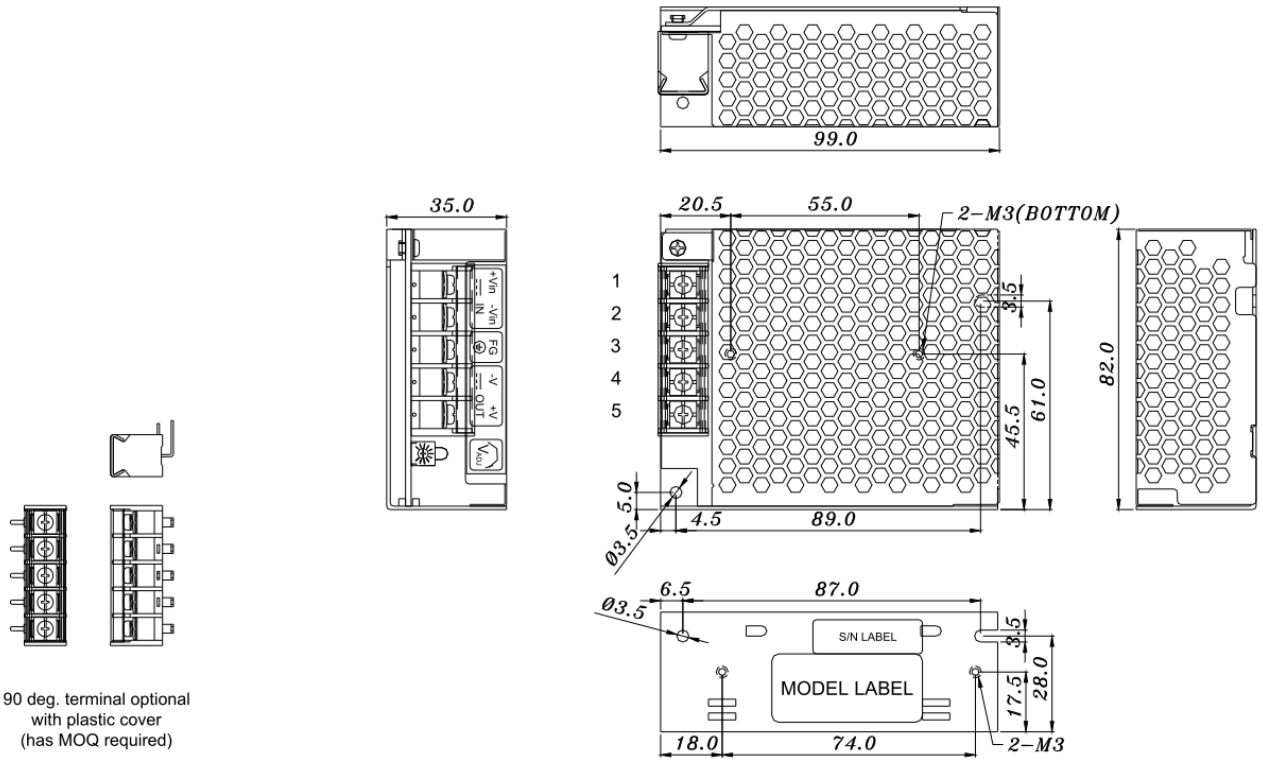

NOTES:

MODEL No.	1	2	3	4	5
SDS-050M-xx	+Vin	-Vin	FG	-V	+V

Bedienungsanleitung

DE

WARNUNG: Die Missachtung nachfolgender Informationen kann einen elektrischen Schlag, Brände, schwere Unfälle oder den Tod zur Folge haben.

- Vor Installations- und Wartungsarbeiten ist die Netzspannung zu unterbrechen und gegen versehentliches Wiedereinschalten zu sichern.
- Das Gerät darf nur von qualifiziertem Fachpersonal installiert und gewartet werden. Die jeweiligen Normvorgaben zur Installation sind einzuhalten.
- Das Gerät ist weder wasserdicht noch spritzwassergeschützt. Es darf nicht im Freien, in Bädern oder Feuchträumen betrieben werden (ausgenommen Schutzart IP67).
- Die auf dem umseitig abgedruckten Datenblatt angegebenen Spezifikationen sind einzuhalten. Vor der Installation ist die Übereinstimmung der Angaben auf dem Datenblatt mit den Angaben auf dem Typenschild des Gerätes zu überprüfen.
- Im Inneren des Gerätes herrschen gefährliche Spannungen, ein vorhandenes Gehäuse dient der Sicherheit und darf nicht geöffnet oder entfernt werden. Es befinden sich keine zu wartenden Teile im Inneren des Gehäuses.
- Bei nicht bestimmungsgemäßem Einbau oder Gebrauch erlischt die Gewährleistung.

Nicht im Hausmüll entsorgen

Dieses Gerät darf nicht im Hausmüll entsorgt werden. Entsorgen Sie es über Ihre kommunale Sammelstelle für Elektronik-Altgeräte.

Operating Instructions

EN

ATTENTION: Follow these instructions closely. Not doing so may result in an electrical shock, bodily injuries, fires, severe accidents or death.

- Always disconnect the electrical supply before installation of the device or carrying out any maintenance.
- Installation or maintenance must be carried out by a professionally skilled person only. Standards and regulations must be met in all cases.
- This device is not water resistant or splash-water proof. It must not be installed in the open, in bathrooms or other moist environments (except Protection Rating IP67).
- Specifications set out on the data sheet printed overleaf must be followed closely. Before installation the user must convince oneself that the details set out on the data sheet match the details printed on the label of the device.
- There are hazardous voltages inside the device. The casing provides for safety and must not be opened or removed. No serviceable parts are to be found inside the device.
- Non-compliance with these operating instructions results in invalidation of the warranty.

Do not dispose of in domestic waste

This device must not be disposed of in domestic waste. Always dispose of electronic appliances at the designated collection facilities.

Hersteller / Manufacturer:
Sunpower Technology Corp.
16F-1, No. 150, Jian 1st Rd.
Zhonghe Dist.
New Taipei City 235
Taiwan, R.O.C.

Importeur / Imported by:
DEHNER Elektronik GmbH
Untere Bein 3
DE-65375 Oestrich-Winkel

E-Mail: info@dehner.net
Internet: www.dehner.net

130828

DEHNER Elektronik GmbH

- AC / DC Power Supplies
- External / Plug-In Supplies
- LED Drivers
- DIN Rail Power Supplies
- Medical Power Supplies

DEHNER Elektronik GmbH
Untere Bein 3
65375 Oestrich-Winkel
Germany

Phone: +49 6723 913-0
Fax: +49 6723 913-18

www.dehner.net **info@dehner.net**